Static 2D FFT Adaptation Through a Component Model Based on Charm++ (preliminary results)

Vincent Lanore[1], Christian Pérez[2]

[1] ENS de Lyon, [2] Inria
LIP, Avalon team

06/14/2013 – 9th JLPC workshop

Context: Adaptation and HPC

Context: **HPC**

Applications are used:

- on various architectures;
- with various input data and parameters.

Challenge: **adaptation** to improve performance.

Adaptation:

- **To what?** To architecture, to input parameters, to reservation size...
- **When?** At compile-time, at launch-time, at runtime...
- **How?** Parameter tweaking, low-level optimization, *algorithmic changes, application structure changes*...

Adaptation

Our focus:

- algorithmic-level adaptation;
- application structure adaptation.

How to implement as a developer?

Component models deal with application structure.

Goal of this presentation:

- illustrate adaptation challenges with the FFT example;
- evaluate the component approach for adaptation.

Plan

- **Distributed FFT**
  - Algorithms
  - Performance analysis
- **Gluon++: a Charm++ Component Model**
  - Overview
  - 2D FFT in Gluon++
- **Evaluation**
  - Performance
  - Software engineering
- **Conclusions & Perspectives**

Fast Fourier Transform

The Fast Fourier Transform (**FFT**):

- important tool in engineering and physics;
- used in many HPC applications.
  - notably in large-scale numerical simulations

    $\Longrightarrow$ distributed FFT

A widely-used Distributed FFT Algorithm

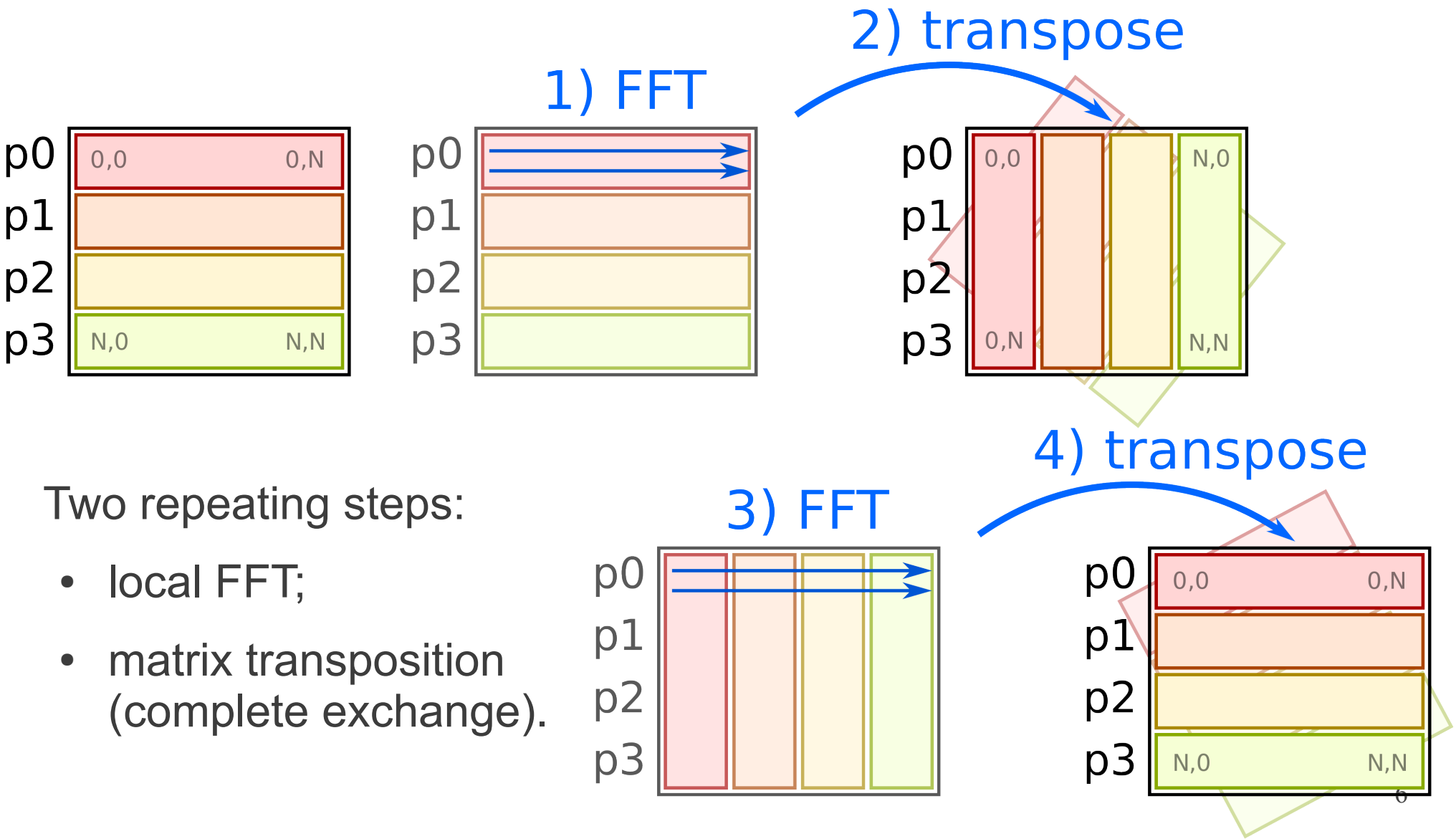

Two repeating steps:

- local FFT;
- matrix transposition (complete exchange).

Performance, Data Size and Architecture

Let N be the matrix size and p the number of cores.

Distributed FFT performance:

- High $N/p \Longrightarrow$ local FFT is dominant;
  - affected by node architecture, memory bandwidth...
  - well-known problem, *e.g.* FFTW [3].
- Low N/p, high $p \Longrightarrow$ transposition is dominant;
  - affected by network latency, topology, bandwidth, memory bandwidth...

Linear Exchange (LEX)

1) send

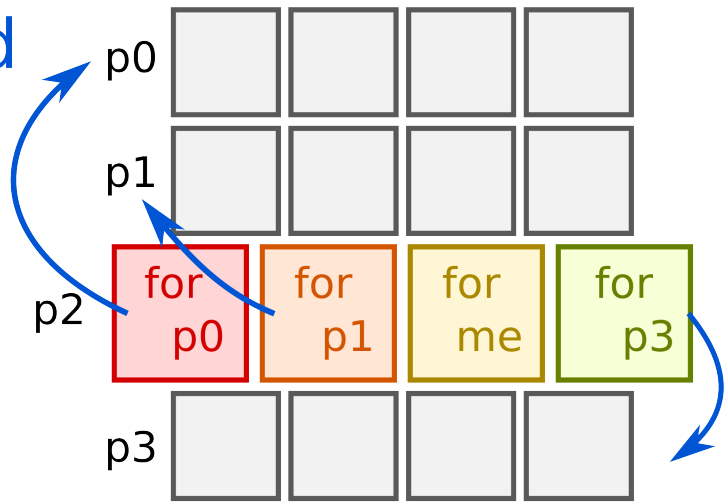

2) receive

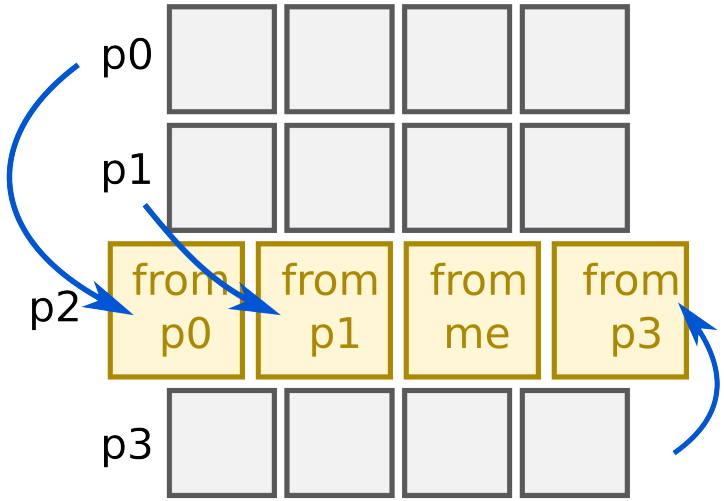

Characteristics:

- variants: PEX, BEX;
- minimal data sent and copied in memory;
- $O(p^2)$ messages;
- good with large *N/p*.

Recursive Exchange (REX)

Characteristics:

- $O(p \times \log(p))$ messages;
- messages *N/2* times larger;
- good with small *N/p* and large *p*.

FFT Adaptation

Matrix transposition:

- select BEX/PEX/LEX or REX depending on *N* and *p*;
- many more variants, *e.g.* from MPI [1,2].

Matrix decomposition: *e.g.* 3DFFT → slab or pencils [4].

Local FFT: *e.g.* FFTW codelets [3].

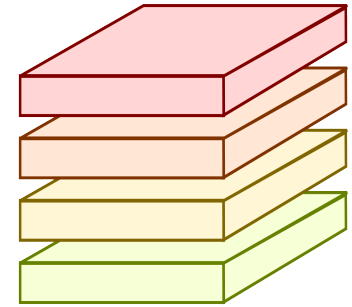

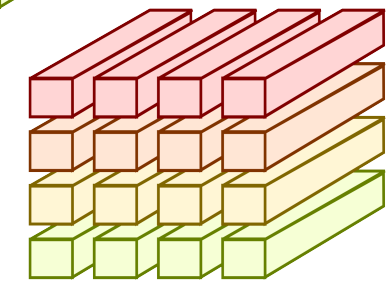

Such adaptations rely on **variant selection.**
Existing solutions → specialized frameworks;

As a developer how to:

- develop and maintain variants;
- select variants (manually or automatically).

Plan

- **Distributed FFT**
  - Algorithms
  - Performance analysis
- **Gluon++: a Charm++ Component Model**
  - Overview
  - 2D FFT in Gluon++
- **Evaluation**
  - Performance
  - Software engineering
- **Conclusions & Perspectives**

Component Models

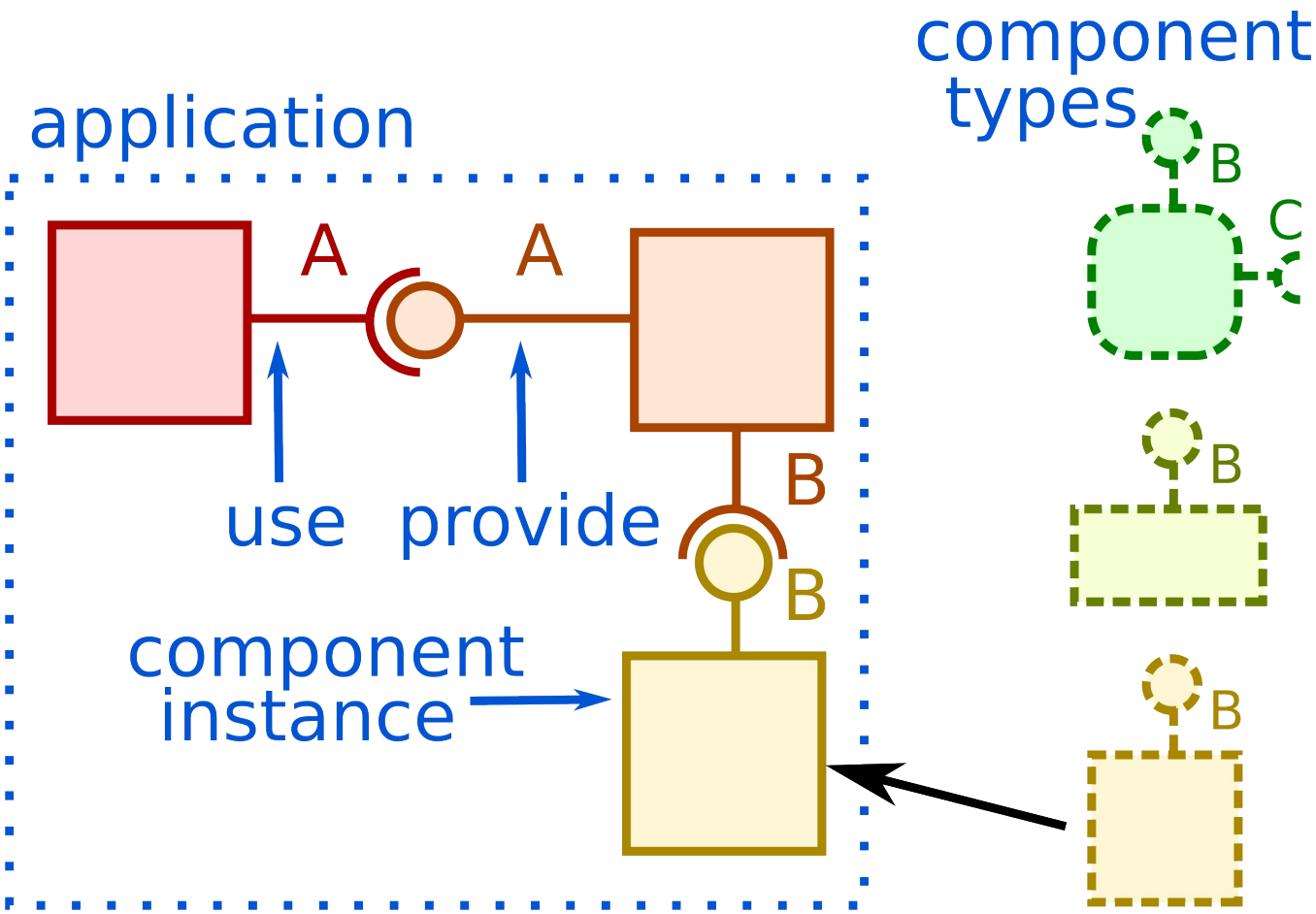

Components = black boxes that interact through **ports**

Application = **assembly** of component instances

Charm++

Charm++
developed in the Parallel Programming Laboratory at the University of Illinois

- Message-passing object-oriented language;
  - objects: “chares”;
  - distant asynchronous method calls through proxies.
- Platform-independent;
  - mapping chares to PEs;
  - chare arrays and groups (1 chare/PE).
- Performance;
  - latency tolerance;
  - dynamic load balancing.

Gluon++

developed by Julien Bigot in the Avalon team (Inria, LIP)

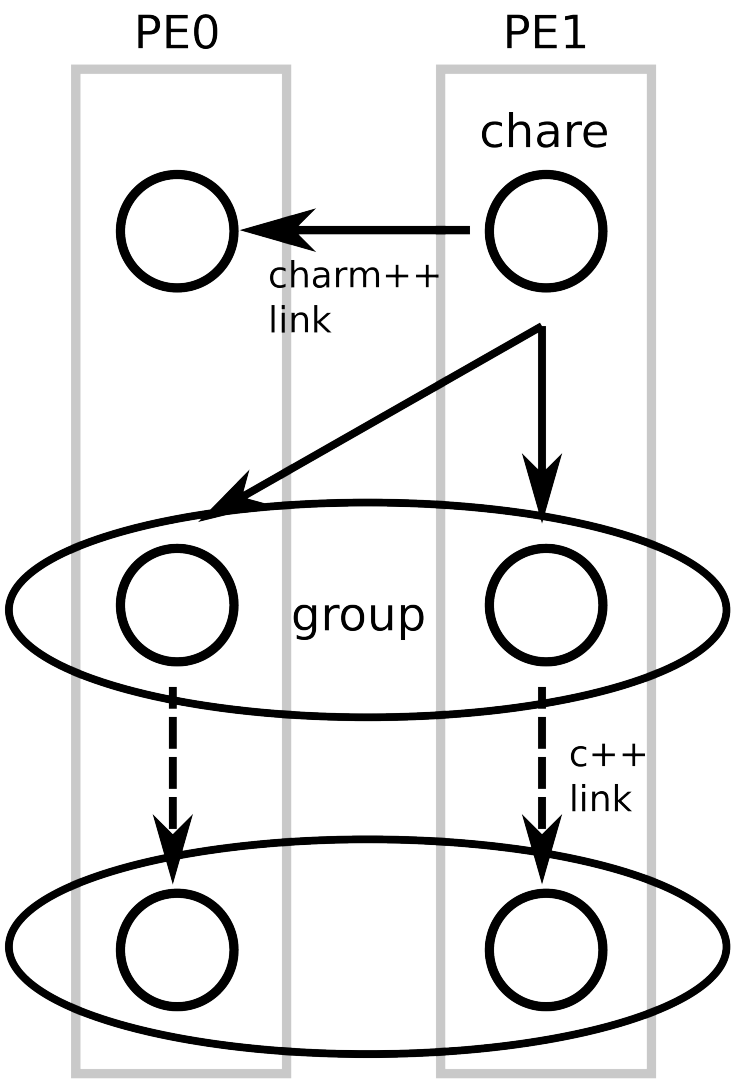

Assembly in separate file:

- instance list;
- placement on PEs;
- parameters.

`gluon_loader`

- loads required components only;
- resulting application is “component-free”.

Gluon++

developed by Julien Bigot in the Avalon team (Inria, LIP)

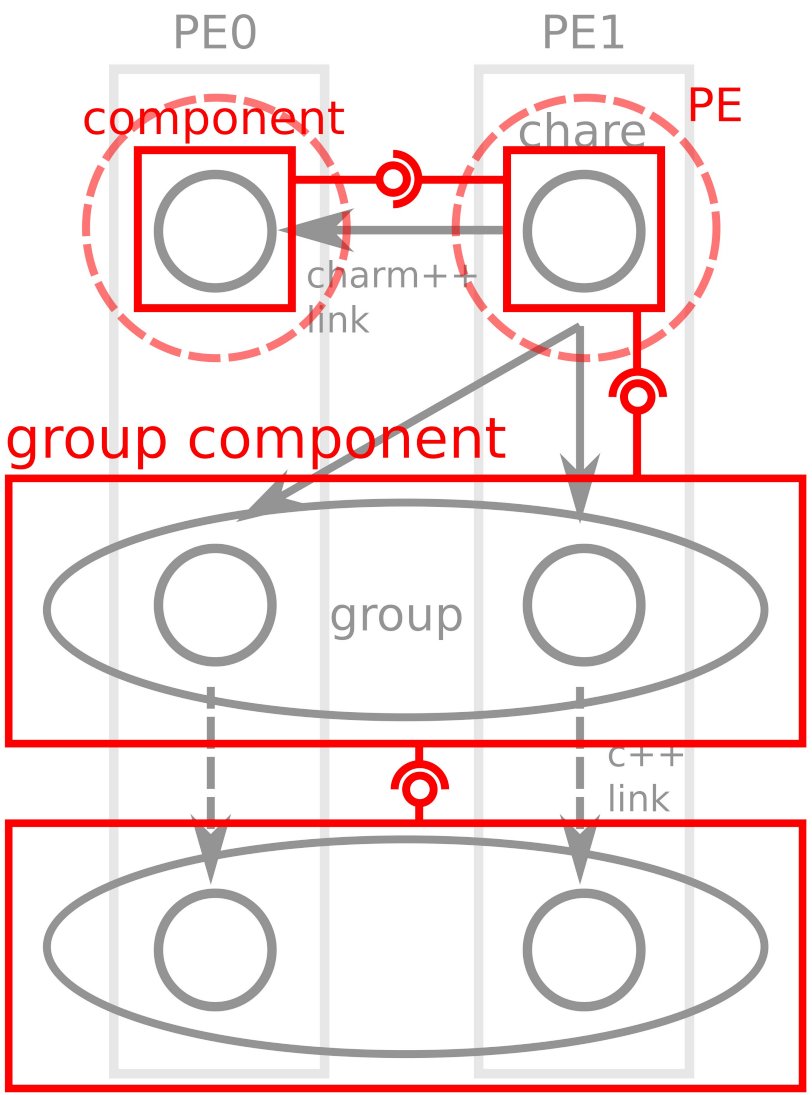

Assembly in separate file:

- instance list;
- placement on PEs;
- parameters.

`gluon_loader`

- loads required components only;
- resulting application is “component-free”.

FFT2D in Gluon++

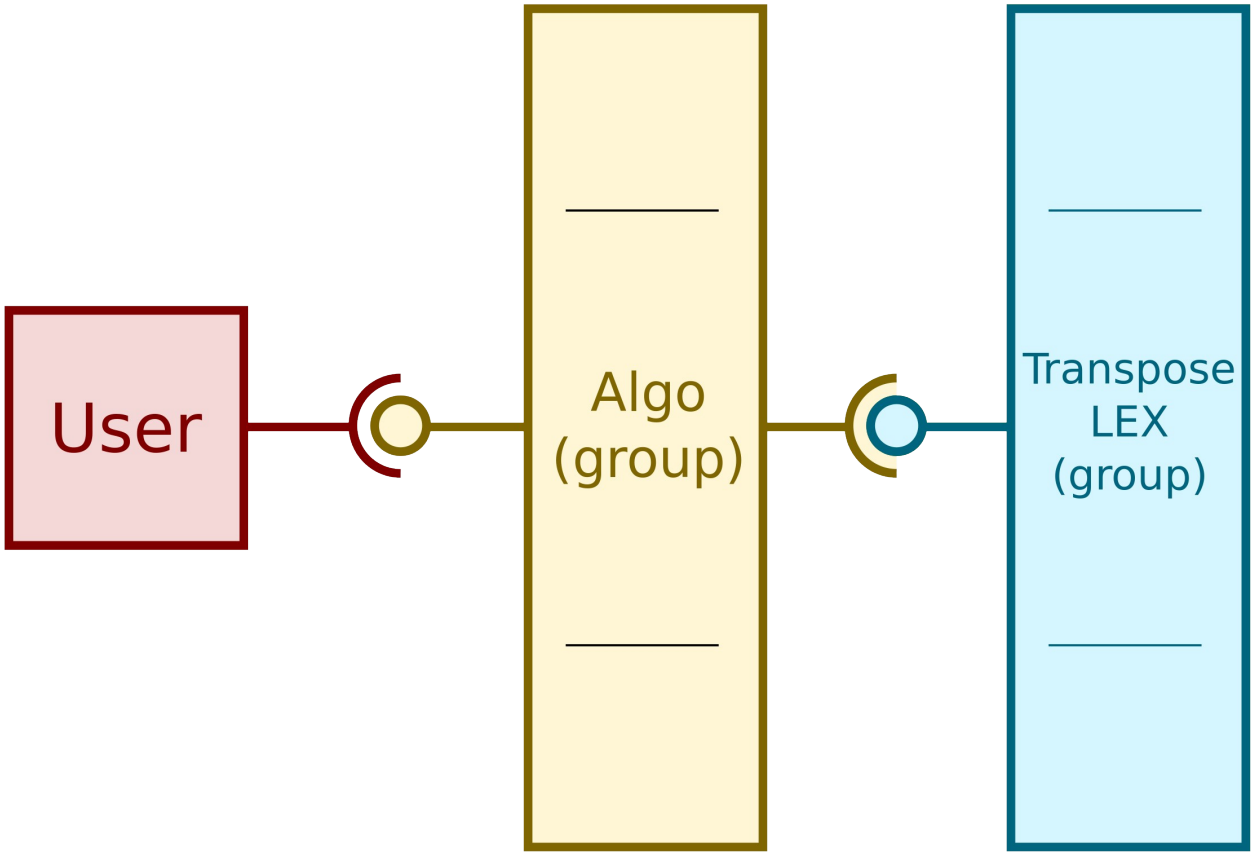

Code reuse: 2D matrix transposition from 1D FFT in gluon++.

Local FFT: FFTW (in Component Algo).

FFT2D in Gluon++

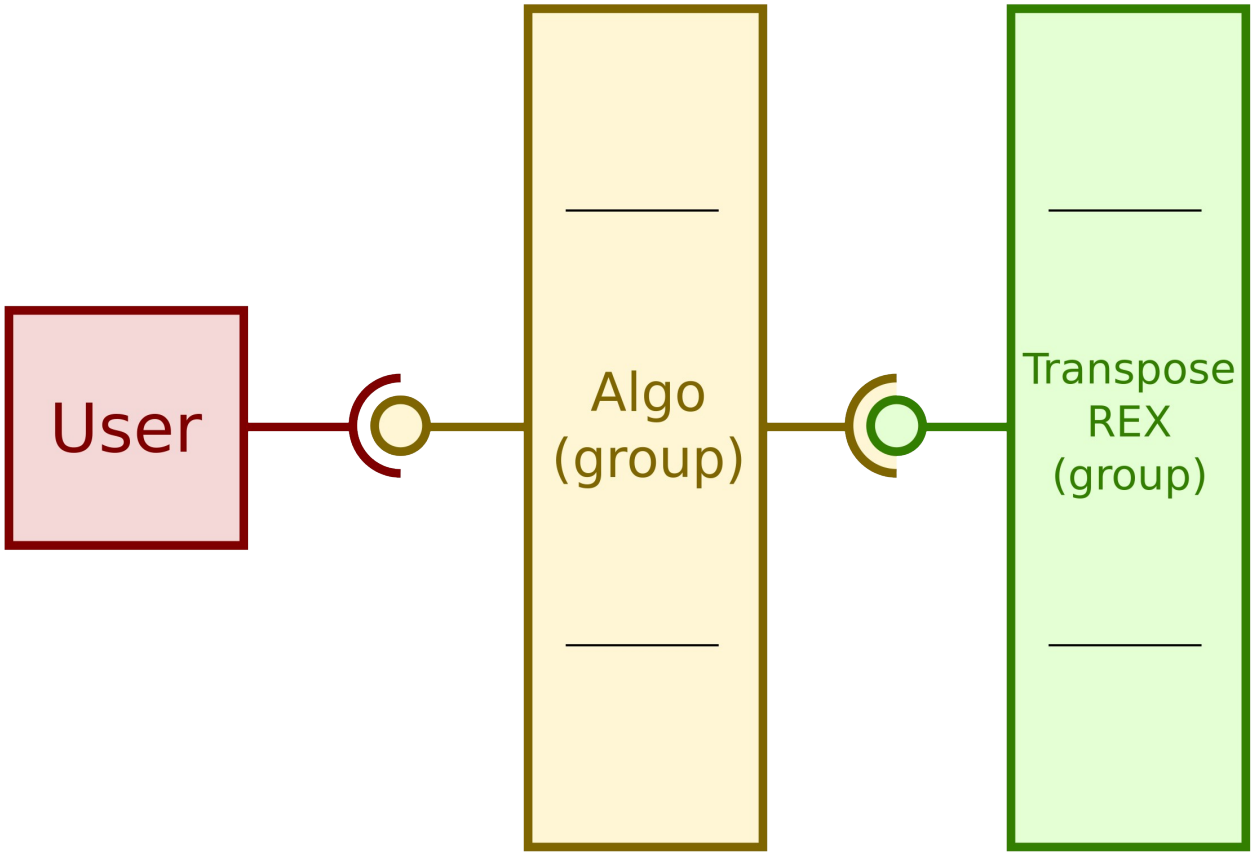

Code reuse: 2D matrix transposition from 1D FFT in gluon++.

Local FFT: FFTW (in Component Algo).

Plan

- **Distributed FFT**
  - Algorithms
  - Performance analysis
- **Gluon++: a Charm++ Component Model**
  - Overview
  - 2D FFT in Gluon++
- **Evaluation**
  - Performance
  - Software engineering
- **Conclusions & Perspectives**

Evaluation: Performance (1)

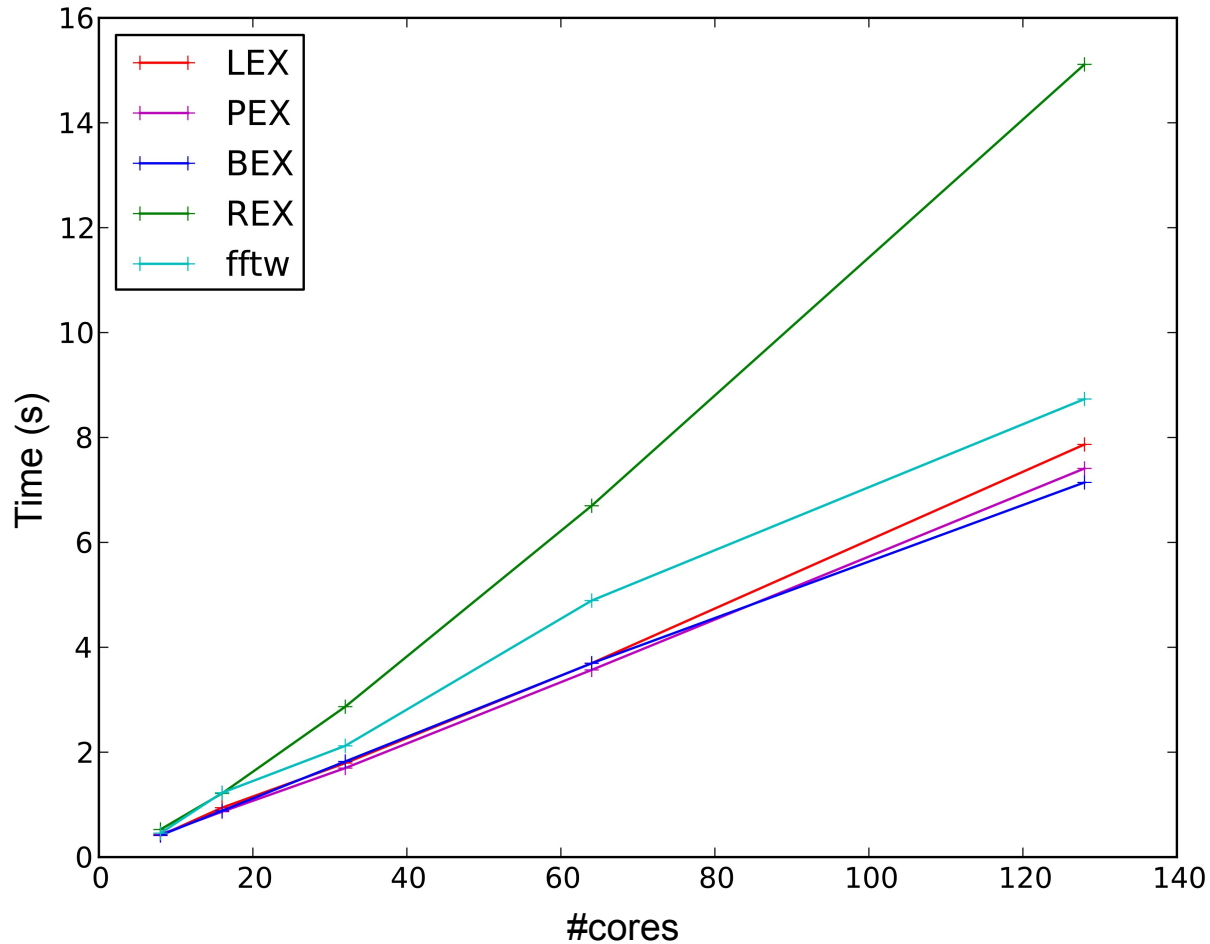

Grid'5000

Griffon cluster

8-core nodes; 1PE/core. **Infiniband network.**

"Weak scaling": *N/p* is constant. **High *N/p*:** $p \times 500\text{kB}$ per proc.

Evaluation: Performance (2)

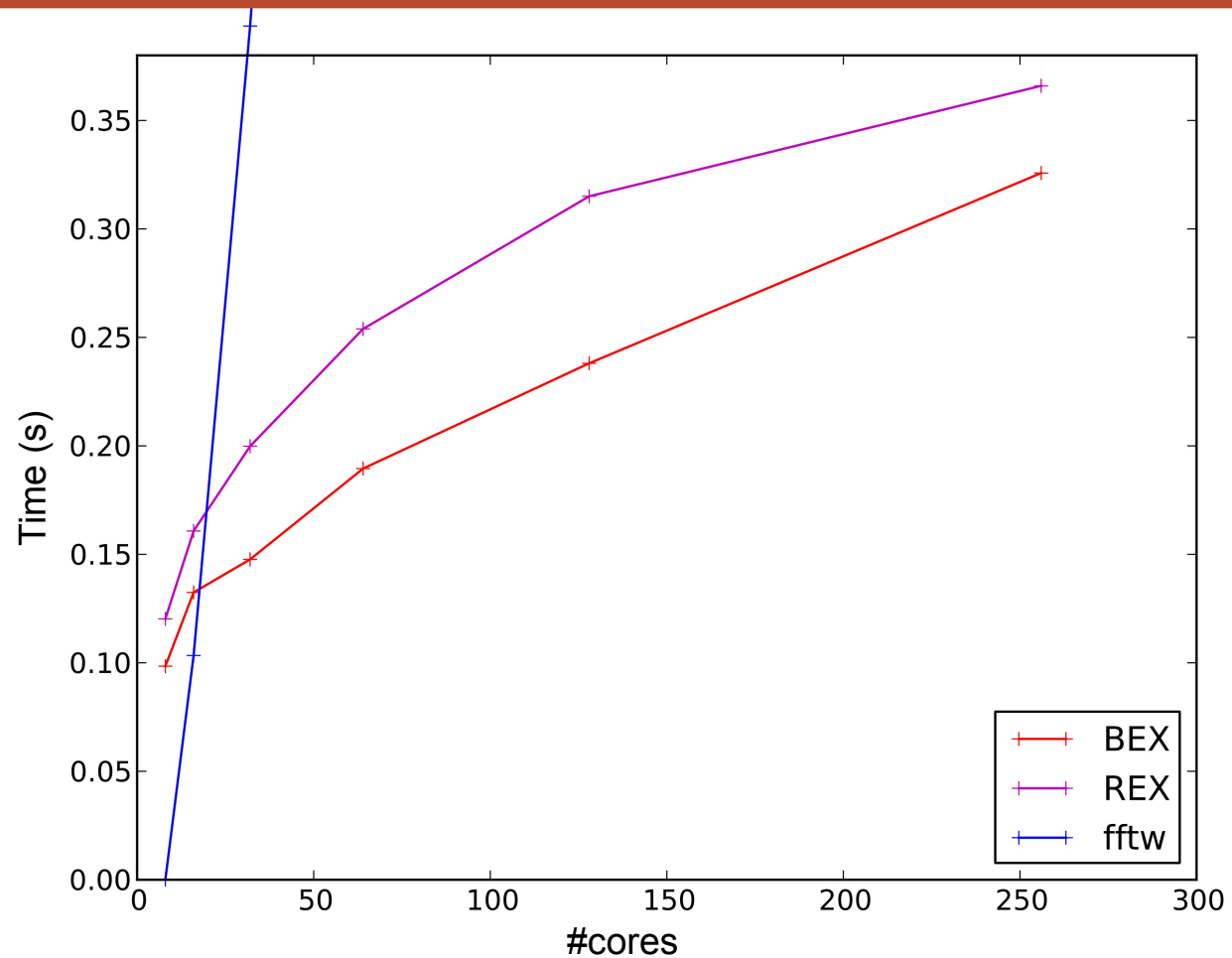

Grid'5000

Griffon cluster

8-core nodes; 1PE/core. **Infiniband network.**

"Weak scaling": *N/p* is constant. ***N/p=1.***

Evaluation: Software Engineering

Component development:

- raw Charm++ programming plus a few macro calls;
- LEX/PEX/BEX → **reuse** of existing component + copy/paste/rename + a few lines of code (<1 hour);
- REX → from scratch, a few days;

Component assembly:

- 20-line XML file; 4/5 lines per component;
- variant selection → one word;
- set attribute values;
- no recompilation.

Making a new component:

- (write new charm interface file);
- write new .cpp file
- compile component into .so;
- ready to use in assembly.

Component development and compilation → fully **independent**

Discussion

Thanks to Charm++:

- easy component programming;
- performance.

Thanks to components:

- independent component development;
- easy assembly.

Gluon++ is a suitable solution for **component design**, **concrete assembly** and **execution**.

Remaining problem: **how to generate gluon assembly?**

→ to optimize performance;

→ while preserving component-independence.

Possible solution: generate from a high-level model.

Plan

- **Distributed FFT**
  - Algorithms
  - Performance analysis
- **Gluon++: a Charm++ Component Model**
  - Overview
  - 2D FFT in Gluon++
- **Evaluation**
  - Performance
  - Software engineering
- **Conclusions & Perspectives**

Conclusions and future work

Challenge:

- adaptation for HPC; variant selection;
- developer perspective.

Proposed answer: Gluon++

- Charm++;
- Components.

First external user of Gluon++.

Evaluation with 2D FFT:

- good performance on Grid'5000;
- easy variant development and selection.

Perspectives:

- more experiments (BlueWaters? Curie?);
- HLCM;
- 3D implementation;
  - slab/pencil decomposition;
  - comparison with Charm++ 3D FFT.

References

- [1] Rajeev Thakur, Rolf Rabenseifner and William Gropp *Optimization of Collective communication operations in MPICH*, International Journal of High Performance Computing Applications, 2005
- [2] Jeffrey M. Squyres and Andrew Lumsdaine, *The Component Architecture of Open MPI: Enabling Third-Party Collective Algorithms*, Component Models and Systems for Grid Applications, 2005
- [3] Matteo Frigo and Steven G. Johnson, *The Design and Implementation of FFTW3*, Proceedings of the IEEE, 2005
- [4] R. Schultz, *3D FFT with 2D decomposition*, CS project report, Center for molecular Biophysics, 2008